REVISIONS				
ZONE	REV.	DESCRIPTION	APVD.	DATE

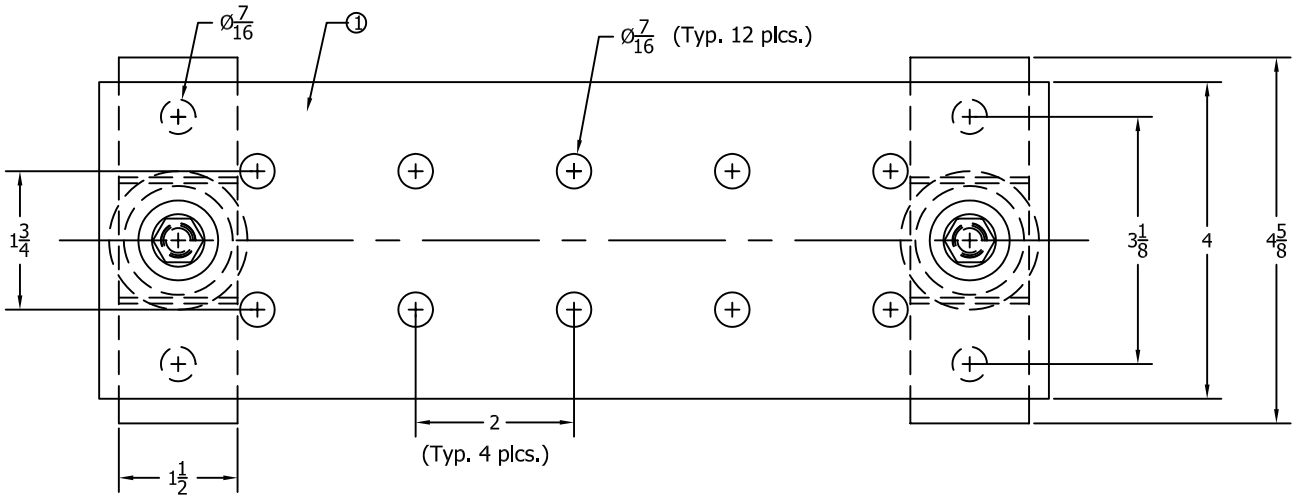

Parts List

Part Number: GBIC-250412		
Item	Qty.	Description
1	1	1/4 x 4 x 12 Copper Bar
2	2	Mounting Bracket
3	2	Insulator
4	2	3/8-16 x 3/4" HHCS
5	4	3/8 Lock Washer
6	4	3/8 Washer
7	2	3/8-16 x 1/2" HHCS

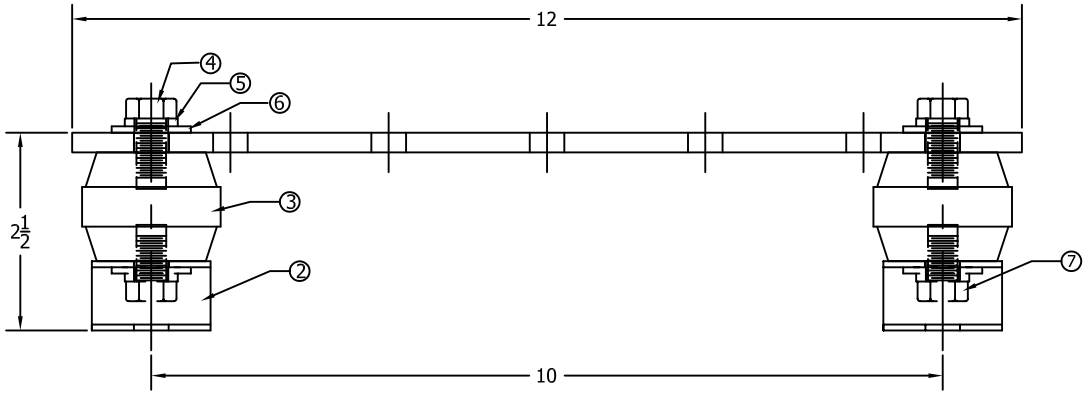

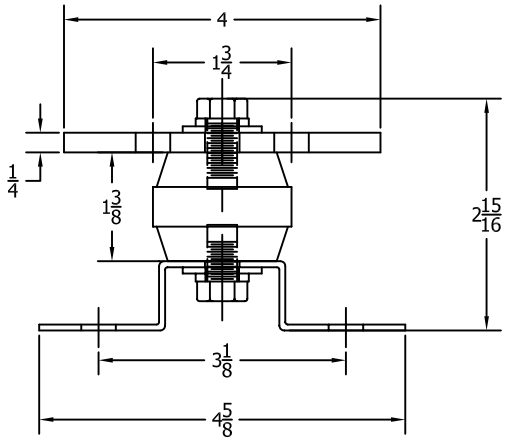

NEXT ASSEMBLY	USED ON

UNLESS OTHERWISE SPECIFIED:
DIMENSIONS ARE IN INCHES; TOLERANCES
FRACTIONS ± DECIMALS .XX ± .XXX ± ANGLES ±
DIMENSIONAL LIMITS APPLY BEFORE FINAL FINISH.

MATERIAL: As Specified

FINISH: None

NOTICE
THIS INFORMATION IS THE PROPERTY OF N.J. SULLIVAN CO., ANY REPRODUCTION, PUBLICATION OR DISTRIBUTION TO A THIRD PARTY IS STRICKLY FORBIDDEN UNLESS WRITTEN PERMISSIONS ARE GIVEN BY AN AUTHORIZED AGENT OF
N.J. SULLIVAN CO., INC.

DFTG.:	B.Buck	DATE 02/12/01
CHKR.:		DATE
MECH. ENG.:		DATE
ELEC. ENG.:		DATE
PROJ. ENG.:		DATE

N.J. SULLIVAN CO.
INCORPORATED
P.O. BOX 438, STERLING, VIRGINIA 20167
METAL FABRICATION

DWG. TITLE:
Isolated Ground Bar
1/4" x 4" x 12"

SIZE B | DWG. NO.: P10001 | REV. a

SCALE: | EST. WT. LBS. | SHEET OF